REV.	REMARK	DATE	SIGN.

RoHS

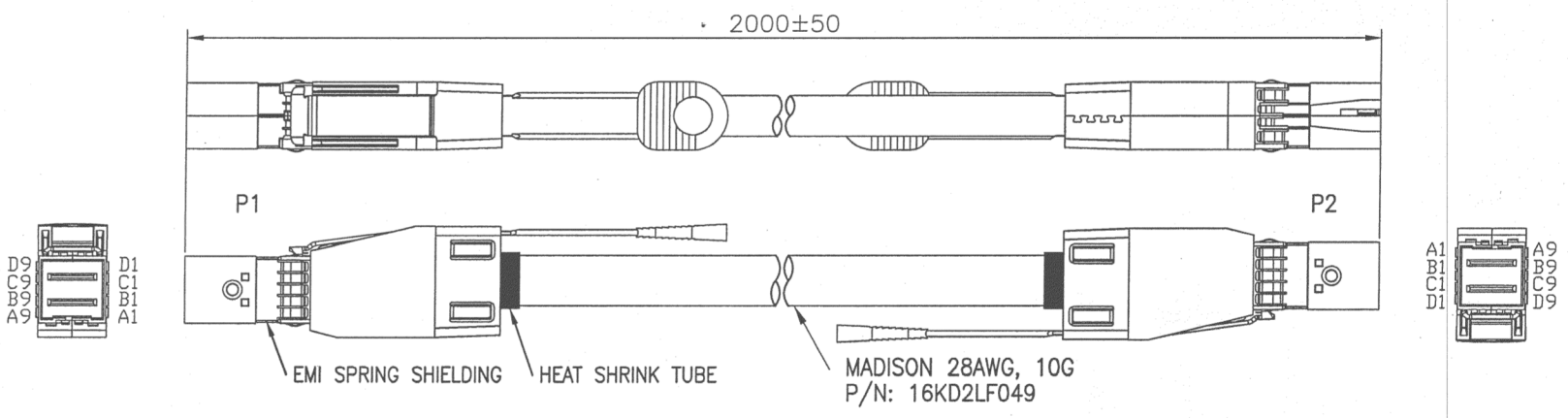

MATERIAL RoHS COMPLIANT:

1.CABLE:
- CONDUCTOR: 28AWG SOLID SILVER PLATED COPPER.
- INSULATION: FOAM POLYOLEFIN.
- PAIR: 2 SINGLES LAID FLAT AND PARALLEL.
- CORE: 8 PAIRS
- PAIR DRAIN WIRE: 30AWG SOLID TIN PLATED COPPER.
- PAIR SHIELD: ALUMINUM/POLYESTER TAPE. ALUMINUM SIDE FACING IN, 25% OVERLAP.
- INNER SHIELD: ALUMINUM/POLYESTER TAPE, ALUMINUM SIDE FACING OUT, 25% OVERLAP.
- OUTER SHIELD: 38AWG TIN PLATED COPPER BRAID, 85% COVERAGE.
- JACKET: FLEXIBLE PVC, COLOR – BLACK.
- DIAMETER: 7.88±0.25mm
- PRINT LEGEND: "MADISON CABLE {Mfg. Location Codw} (UL) TYPE CL2 75°C 28AWG CSA AWM II A/B 75°C 30V FT4 TurboTwin™ SUBSTANCE COMPLIANT 2011/65/EU {D/C}"
- DIFFERENTIAL IMPEDANCE: 100±5 OHMS @TDR
- UL LISTING: TYPE CL2 AS SPECIFIED IN ARTICLE 725 OF THE NATIONAL ELECTRICAL CODE.

2.CONNECTOR:
- P1,P2: Mini SAS HD 4x CABLE PLUG (SFF-8644)
  - (1) P.C.B: 4 LAYERS, GOLD PLATING ON CONTACT PADS, WITHOUT CARBON (P/N: MPCB-040113LF REV.A / SPCB-040114A)
  - (2) LATCH: STAINLESS STEEL
  - (3) BACKSHELL– ZINC DIE CASTING HOOD/ NICKEL PLATING
  - (4) PULL TAB: NYLON UL94V-0, COLOR: BLUE.
  - (5) EMI SPRING SHIELDING

3.FOR SAS 12.0 Gbps.

4.TWO-WIRED SERIAL MEMORY: ATMEL AT24C02B EEPROM (256 BYTES).

DESC.	Mini SAS HD 4x/Mini SAS HD 4x CABLE ASS'Y	APPROVED	CHECKED	DESIGNED	TOLERANCE	SCALE	*	UNIT	mm	
P/N	[redacted] CUSTOMER P/N		C.M.Wang	Sino		DATE	04/10/'14	DWG NO:	DWG\RC\6699	